KEG LIFTER USER MANUAL

IMPORTANT: READ CAREFULLY BEFORE USE.

Questions or concerns? For assistance, please contact Customer Service at info@keglifter.com.

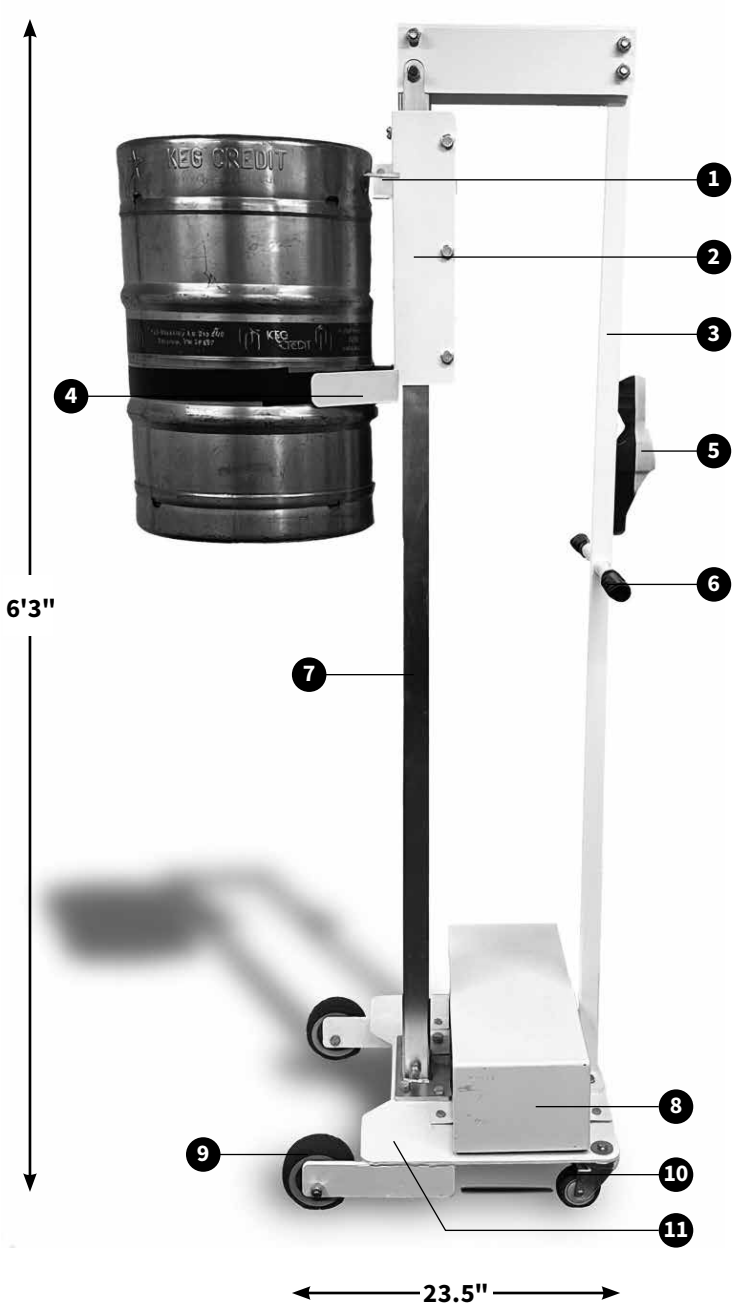

NO.	ITEM
1	Lifting Tongue
2	Lifting Slide
3	Winch
4	Keg Slide
5	Rocker Switch
6	Drive/Steer Handle
7	Mast
8	Counter Balance Weight
9	Large Wheels
10	Swivel Wheels
11	Base





Bottom Shelf Clearance**

MODEL NUMBER	LIFT HEIGHT	LIFT CAPACITY	SHIP WEIGHT	ELECTRICAL	WHEEL DIAMETER	TURNING RADIUS
Keg Lifter	42 inches*	200 lbs	220 lbs	120 volts	25" w/o Keg	25" w/o Keg, 36" w/ Keg

*Maximum lift height measured from bottom of keg to floor.
**Bottom shelf must have 6" of clearance from floor.

KEGLIFTER.COM

AHFP BEVERAGE SERVICES INSTALL • CLEAN • REPAIR

KEG LIFTER USER MANUAL

IMPORTANT: READ CAREFULLY BEFORE USE.

Questions or concerns? For assistance, please contact Customer Service at info@keglifter.com.

SAFETY:

- Keep fingers away from cables and any moving parts.
- Always hold onto the rear grips when moving the Keg Lifter to ensure stability.
- When lifting or lowering the Keg Lifter, use one hand on the rear grips and the other hand on the switch.
- Avoid holding the switch in the UP position when the Lifting Slide is at the top of its range, or in the DOWN position when the Lifting Slide is at the bottom.
- Never stand on the Keg Lifter or on top of a keg.
- Do not assist the Keg Lifter while it's in operation.
- Ensure the lifter is stationary before raising or lowering it; do not attempt to do so while rolling it around.

FIRST TIME SETUP:

1. Remove the Keg Lifter from its shipping packaging and position it upright.
2. Verify that the Lifting Slide is fully lowered and the internal cable is taut.
3. Use the switch located on the back of the Keg Lifter to raise or lower the lifting slide.
4. To charge the Keg Lifter, plug the wall charger into an outlet, then connect the charging cord from the charger to the Keg Lifter. Wait until the charger indicates that the device is fully charged.

OPERATING INSTRUCTIONS:

1. Keep the Keg Lifter charged when not in use to ensure it's ready for operation.
2. If the Keg Lifter is not functioning, check that the battery is charged.
3. To lift a keg, position the Keg Lifter against the keg and insert the tongue of the lifting slide into one of the keg's handles until the Keg Lifter is snug against the keg. Use the switch on the back mast to lift the keg to the desired height. Lower the keg onto the surface until the lifting slide tongue can be removed from the keg handle.
4. When stacking kegs, we recommend using keg stackers/spacers be placed between kegs.

WARRANTY: 90-DAY LIMITED WARRANTY FROM DATE OF DELIVERY.

KEGLIFTER.COM

FEATURES & BENEFITS:

UNIVERSAL FIT

Adjusts to accommodate all beer kegs, making it the ultimate versatile tool.

EFFORTLESS OPERATION

Say goodbye to manual lifting, secure and move kegs with ease.

SPACE MAXIMIZER

Double-stack kegs safely to optimize your cold storage space.

SIMPLE & INTUITIVE

Designed to be user-friendly, everyone can operate it with confidence.

AHFP BEVERAGE SERVICES
INSTALL • CLEAN • REPAIR

AHFP AFFILIATES:
Glacier Design Systems
Stuever & Sons Beverage Systems
T&G's Draught Services

© 2026 A Head for Profits LLC, Brentwood, TN, USA